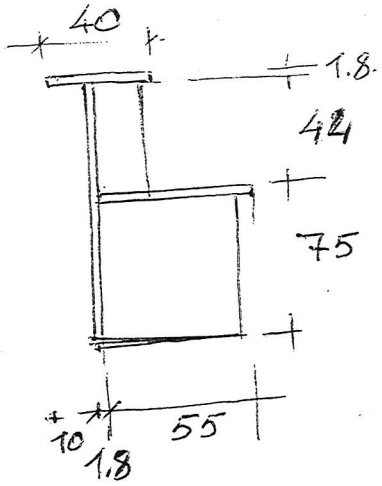
40
1.8
42
75
10
1.8
55

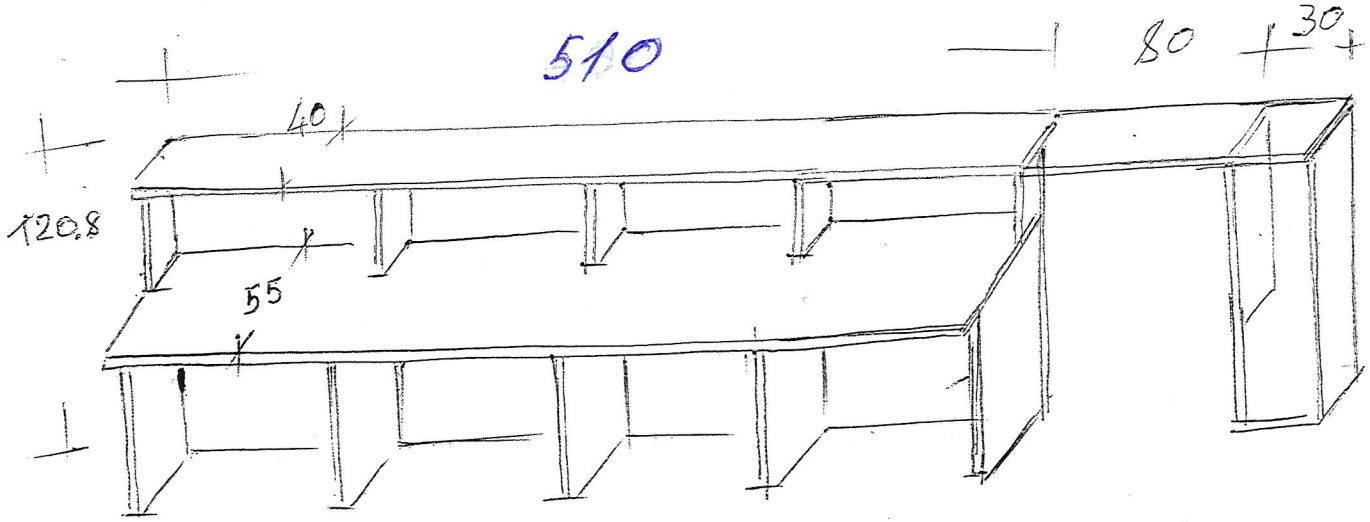
510
80
30
40
120.8
55