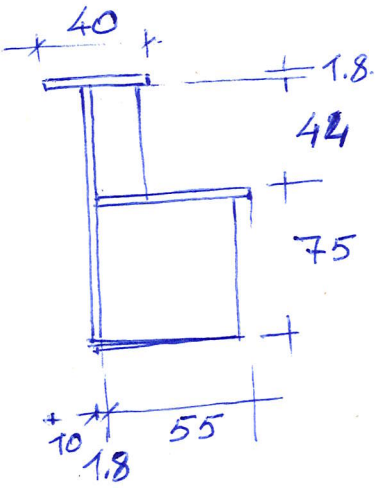
40
1.8
44
75
10
55
1.8

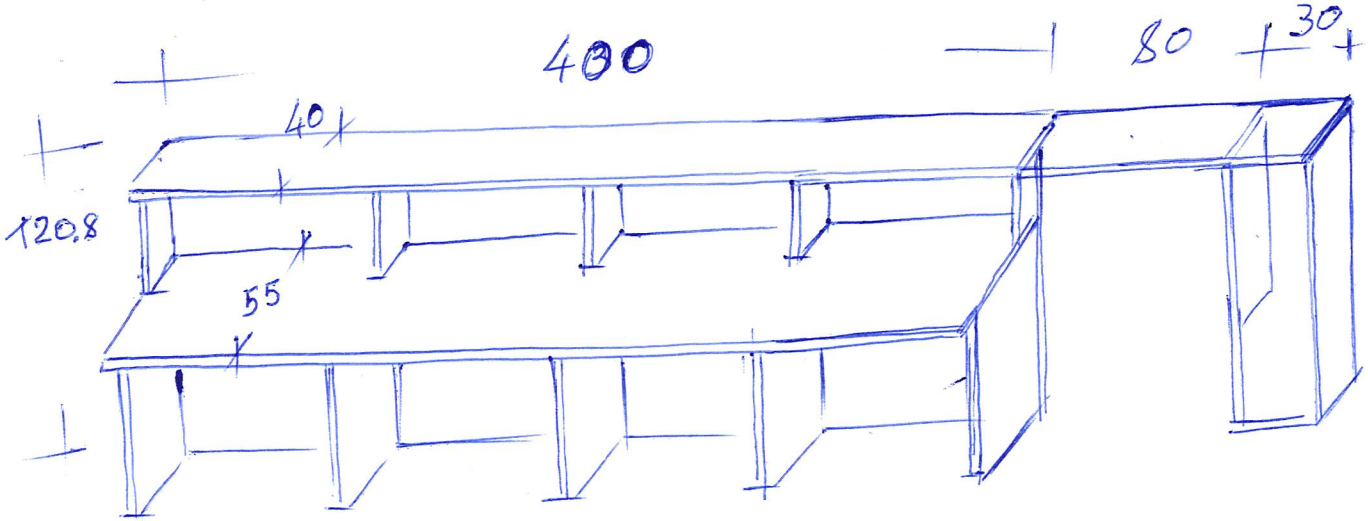
400
80
30
40
120.8
55